vector audio

PROFESSIONAL POWER AMPLIFIERS

DFP SERIES

ENGLISH

OWNER' S MANUAL

vector audio
PROFESSIONAL POWER AMPLIFIERS

DFP SERIES

Important Safety Instructions

This symbol is used to alert the operator to follow important operating and precautions details in documentation.

This symbol is used to warn operators that uninsulated" dangerous voltages" are present within the equipment enclosure that may pose a risk of electric shock.

1. Save the carton and packing material even if the equipment has arrived in good condition. Should you ever need to ship the unit, use only the original factory packing.
2. Read all documentation before operating your equipment. Retain all documentation for future reference.
3. Follow all instructions printed on unit chassis for proper operation.
4. Do not spill water or other liquids into or on the unit, or operate the unit while standing in liquid.
5. Make sure power outlets conform to the power requirements listed on the back of the unit.
6. Do not use the unit if the electrical power cord is frayed or broken. The power supply cords should be routed so that they are not likely to be walked on or pinched by items placed upon or against them, paying particular attention to cords and plugs, convenience receptacles, and the point where they exit from the appliance.
7. Always operate the unit with the AC ground wire connected to the electrical system ground. Precautions should be taken so that the means of grounding of a piece of equipment is not defeated.
8. Mains voltage must be correct and the same as that printed on the rear of the unit. Damage caused by connection to improper AC voltage is not covered by any warranty.
9. Have gain controls on amplifiers turned down during power-up to prevent speaker damage if there are high signal levels at the inputs.
10. Power down and disconnect units from mains voltage before making connections.
11. Never hold a power switch in the "ON" position if it wont there itself.
12. Do not use the unit near stoves, heat registers, radiators, or other heat producing devices.
13. Do not block fan intake or exhaust ports. Do not operate equipment on a surface or in an environment which may impede the normal flow of air around the unit, such as a bed, rug, weather sheet, carpet, or completely enclosed rack. If the unit is used in an extremely dusty or smoky environment, the unit should be periodically "blown free" of foreign matter.
14. Do not remove the cover. Removing the cover will expose you to potentially dangerous voltages. There are no user serviceable parts inside.
15. Connecting amplifier outputs to oscilloscopes or other test equipment while the amplifier is in bridged mode may damage both the amplifier and test equipment!
16. Do not drive the inputs with a signal level greater than that required to drive equipment to full output.
17. Do not connect the inputs / outputs of amplifiers or consoles to any other voltage source, such as a battery, mains source, or power supply, regardless of whether the amplifier or console is turned on or off.
18. Do not run the output of any amplifier channel back into another channel's input. Do not parallel- or series-connect an amplifier output with any other amplifier output. **VECTOR** is not responsible for damage to loudspeakers for any reason.
19. Do not ground any red ("hot") terminal. Never connect a "hot" (red) output to ground or to another "hot" (red) output!
20. Non-use periods. The power cord of equipment should be unplugged from the outlet when left unused for a long period of time.
21. Service Information. Equipment should be serviced by qualified service personnel when:
A. The power supply cord or the plug has been damaged;
B. Objects have fallen, or liquid has been spilled into the equipment;
C. The equipment has been exposed to rain;
D. The equipment does not appear to operate normally, or exhibits a marked change in performance;
E. The equipment has been dropped, or the enclosure damaged.
22. To obtain service, contact your nearest **VECTOR** Service Center.

Table of Contents

P1 Front/Rear/Side View
P2 Appendix B Block Diagram
P3 Front Panel
P4 Rear Panel
P5 Appendix A specifications
P6 Connecting Inputs
Connecting Outputs
P6 Mode Selection
Stereo /Parallel/Bridged
Mono Mode

vector
audio
PROFESSIONAL POWER AMPLIFIERS

DFP
SERIES

vector
audio

Choice of touring professional audio
DFP Series Power Amplifiers

DFP 260 DFP 600

Stereo Mode Connections
(Speakon Output Connectors)

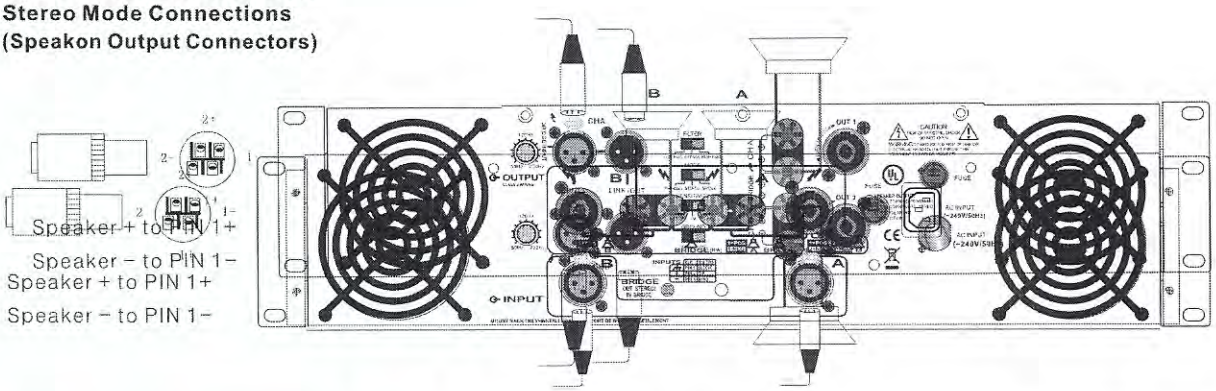

Parallel Mode Connections
(Speakon Output Connectors)

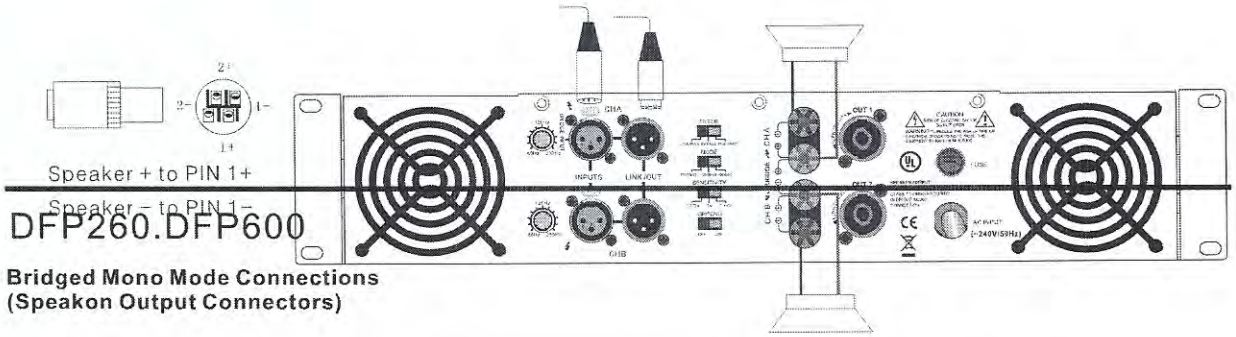

DFP260.DFP600

Bridged Mono Mode Connections
(Speakon Output Connectors)

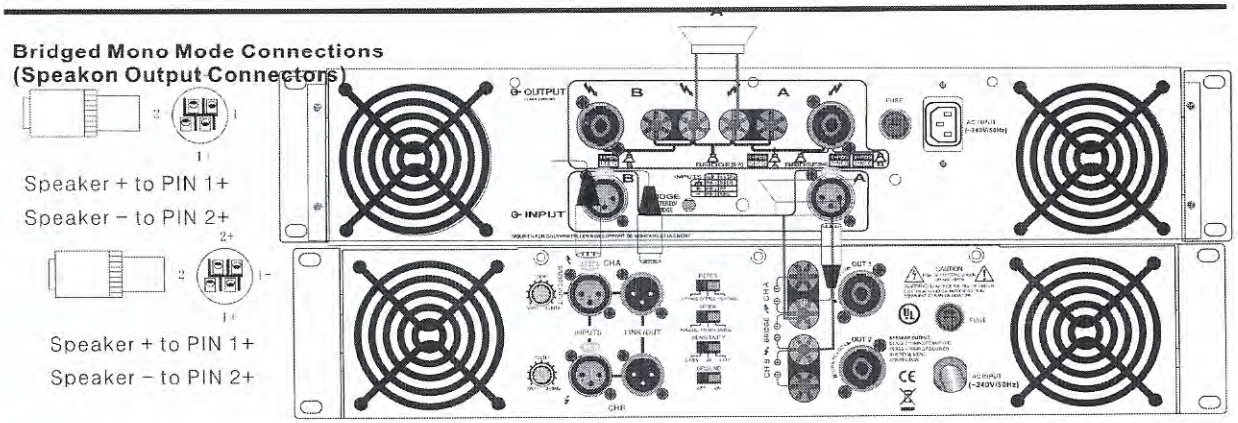

Stereo Mode Connections
(Speakon Output Connectors)

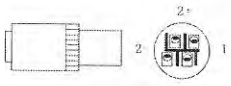

Speaker + to PIN 1+
Speaker – to PIN 1–

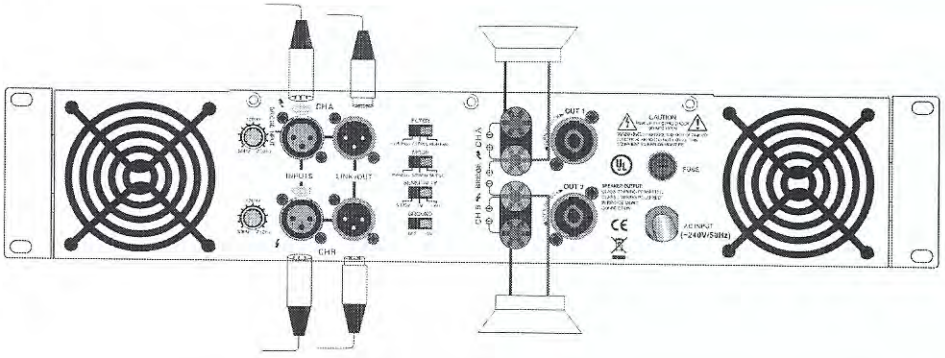

Parallel Mode Connections
(Speakon Output Connectors)

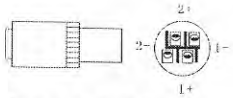

Speaker + to PIN 1+
Speaker – to PIN 1–

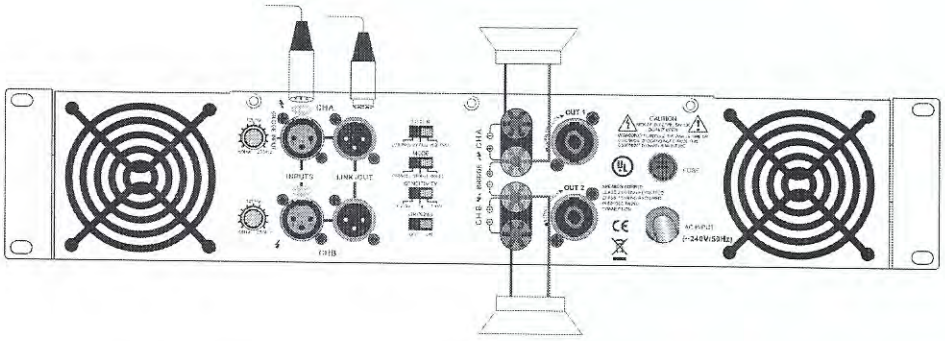

Bridged Mono Mode Connections
(Speakon Output Connectors)

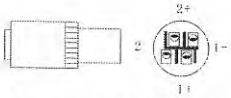

Speaker + to PIN 1+
Speaker – to PIN 2+

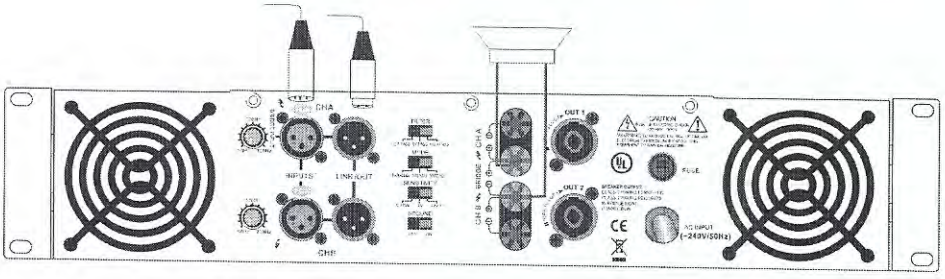

vector audio
PROFESSIONAL POWER AMPLIFIERS

DFP SERIES

General Specification

Specification		DFP260	DFP600	DFP900	DFP1500	DFP2400
Power Output Level 1KHz,THD+N=0.1%	RMS@8ohm stereo	100W+100W	250W+250W	300W+300W	500W+500W	750W+750W
	RMS@4ohm stereo	150W+150W	375W+375W	450W+450W	750W+750W	1100W+1100W
	RMS@2ohm stereo	/	/	500W+500W	950W+950W	1400W+1400W
	RMS@8ohm bridge	/	/	900W	1500W	2200W
	RMS@4ohm bridge	/	/	/	1800W	2700W
Phase response	(1W,20Hz-20KHz at 8ohm)	±10°				
Total Harmonic Distortion (THD+N) 20Hz-20KHz,Half Power		<0.1%				
Frequency Response	1W / 8ohm	20Hz-20KHz-1dB@1KHz±1dB				
Slew Rate		35V/us				
Intermodulation Distoration(IMD) 60Hz:7KHz,4:1,Half power		<0.03%				
Channel Separation	Half Power,RL=8ohm,1KHz Vol.max,input 600ohm shunt	>60dB				
SN Ratio		95dB				
Damping Factor	8ohm,1f=1KHz	400	500	600	600	650
Sensitivity (Vol.max.)	Rated Power into 8ohm	0.775V/1.0V/1.44V				
Input Impedance	Balanced/unbalanced	20K ohm/balanced,10K ohm/unbalanced				
Controls	Front Panel	Power Switch(ON/OFF),Volume/CH				
	Rear Panel	Senstivity switch,operation mode switch,grounding switch,filiter switch				
Input Connectors	Per channel	Female & male XLR (pin 2+,configurable for pin 3+,groung 1+)				
Output Connectors	Per channel	5-way binding posts or speakon connectors				
LED Indicators	Per channel	PROTECT / CLIP / SIGNAL / ACTIVE / BRIDGE / PARALLEL				
Protection Circuit		Short circuit protect,over load protect,DC protect,soft start,high temperature protect limiter				
Class		H	H	H	H	H
Fuse		10A	10A	10A	15A	20A
Power Supply		**AC ~240V,50Hz**				
Cooling		Two step cooling fan controlled by temperature				
Dimensions(W×H×D)		483x430x88mm			483x465x88mm	
Packing Dimensions		550x520x145mm			550x550x145mm	
Weight (Kg) /G.W		16kg/18.6kg	18.5kg/21.5kg	21kg/24kg	23kg/26kg	23kg/26kg

1 Year Warranty subject to Terms and Conditions of UK distributor Batmink Ltd - available on request.

vector Reserves the right to make changes or improvements in manufacturing or design which may affect specification.

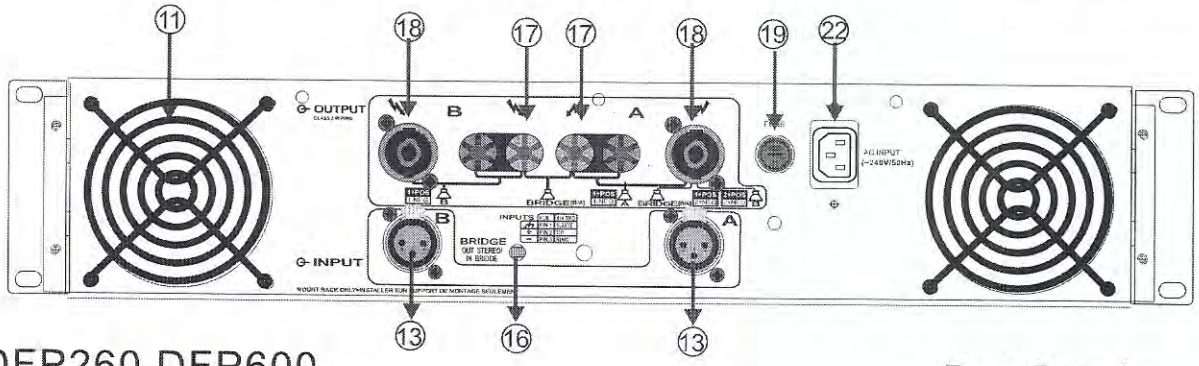

DFP260.DFP600

Rear Panel

11.Air Cooling Windows

This part is the air cooling window. Do not obstruct !

13-14**Balanced XLR Input Connectors.**

These connectors accept input signals on balanced XLR input plugs.See the figure at the lower right corner information on polarity. Connectors for each channel are in parallel. The unused connectors may be used for " loop through" connection other amplifiers.

16.MODE SWITCH

This switch is used to choose the operating mode of the power amplifier:

Mode stereo: 2 inputs (channel A and B) and 2 outputs are used.

Mode bridge: 1 input (channel A) and 1 output (channel A) are used (see binding post description)

17-18.Output Connector

Have two funtion output connectors.One is binding post.another is speakon.Connection to the binding post can be made with bare wire. banana plugs,or spade lug terminations. Make connections to both the channel A and channel B terminals for stereo or Parallel Mode. Or a single connection across the red (" hot") terminals only of channels A and B for bridged mono mode. Using speakon-type speaker cables, make connections to both the channel A and channel B connectors for stereo or parallel mode. Or to the bridged mode connector for bridged mono mode

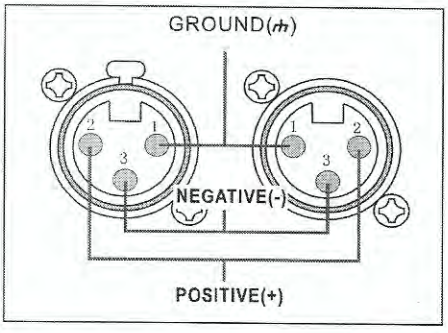

19.Fuse Holder

22.AC Power Cable Socket

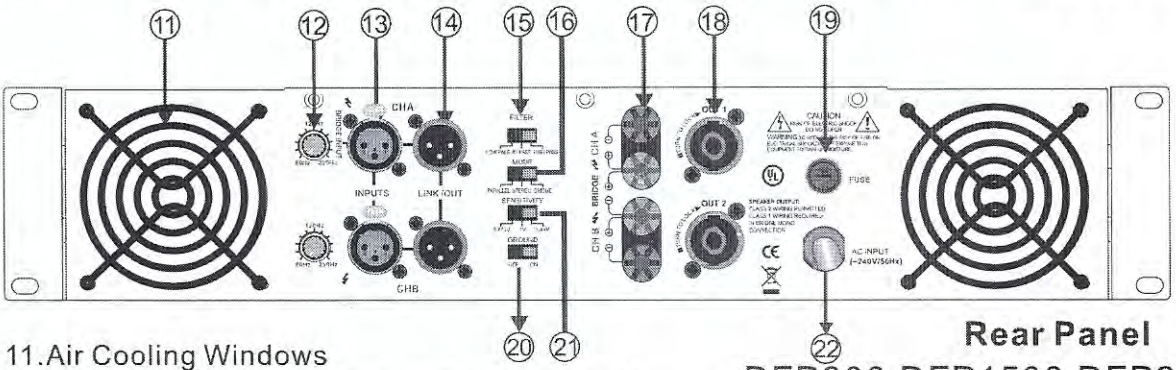

Rear Panel
DFP900.DFP1500.DFP2400

11.Air Cooling Windows
This part is the air cooling window. Do not obstruct !

12.This rotary controls allow the installer to adjust the LOW PASS & HI PASS frequency of the CH1 and CH2 amplifier output

13-14**Balanced XLR Input Connectors.**
These connectors accept input signals on balanced XLR input plugs.See the figure at the lower right corner information on polarity. Connectors for each channel are in parallel. The unused connectors may be used for " loop through " connection other amplifiers.

15.Filter Switch.
This switch configures the amplifier for LOW PASS (80Hz-250Hz),BY PASS.HIGHT PASS(80Hz-20KHz)Mode operation.

16.MODE SWITCH
This switch is used to choose the operating mode of the power amplifier:
Mode stereo: 2 inputs (channel A and B) and 2 outputs are used.
Mode parallel: 1 input (channel A) and 2 outputs are used.
Mode bridge: 1 input (channel A) and 1 output (channel A) are used (see binding post description)

17-18.Output Connector
Have two funtion output connectors.One is binding post.another is speakon.Connection to the binding post can be made with bare wire. banana plugs,or spade lug terminations. Make connections to both the channel A and channel B terminals for stereo or Parallel Mode. Or a single connection across the red (" hot ") terminals only of channels A and B for bridged mono mode. Using speakon-type speaker cables, make connections to both the channel A and channel B connectors for stereo or parallel mode. Or to the bridged mode connector for bridged mono mode

19.Fuse Holder

20.INPUT Ground LFE
You have hum or noise in your speaker,put the selector in " ⏚ " position.

21.Input Sensitivity Selector.
This selector allows to choose the input sensitivity 0.775V,1V,1.4V.

22.AC Power Cable.

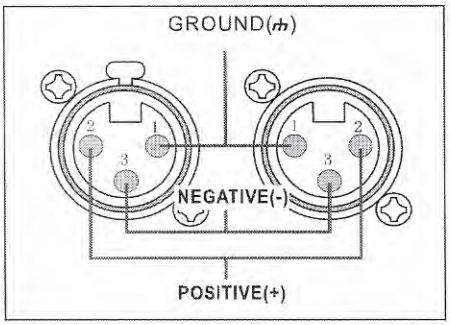

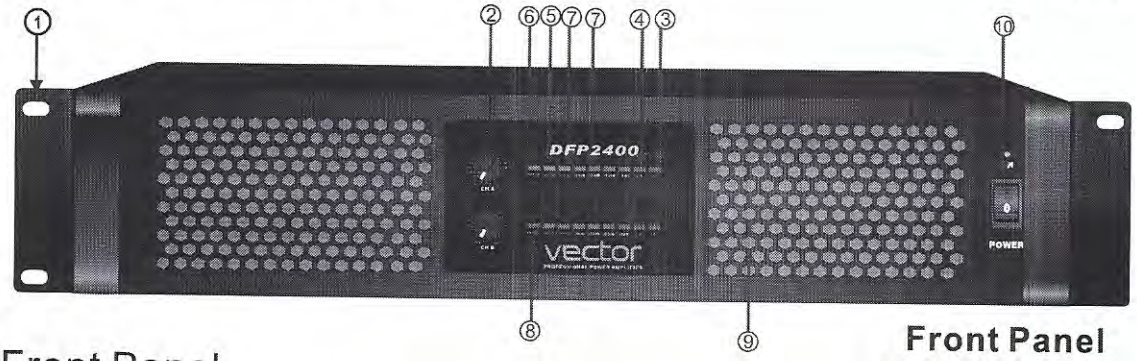

Front Panel

Front Panel

1. Rack Mounting Ears.
Two front panel mounting holes are provided on each mounting ear.

2. Input Attenuators.
Attenuator knobs allow precise setting of input gain for CHA and CHB.

3. Protect LED.

Indicates that the channel is in Protect mode (speaker disconnected by output relay).

4.Clip LED

Illuminates at the clipping threshold. Continuous illumination also indicates that ACL (Active Clip Limiting) protection circuitry is engaged.

5.Active LED

Indicates that input to the amplifier is connected and the amplifier is turned on.

6.Bridge LED

If mode switch put on BRIDGE ,the BRIDGE LED will illuminat.see the rear panel Mode switch.

7.Signal LED

Illuminates to indicate that a signal (above the minimum threshold) is present at the amplifier input and that the signal is being amplified.

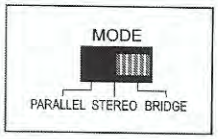

8.Parallel LED

If mode switch put on PARALLEL ,the PARALLEL LED will illuminat.see the rear panel Mode switch.

9.Fan Outlet Grills

This amplifier series is cooled by two rear-mounted fans. Cool air flows over the heat sinks and exhausts through the front grills. Make sure these outlets remain clear to allow unrestricted air flow.

10.AC Power Switch

This is the main power switch press to turn on the amplifier.

Appendix B Block Diagram

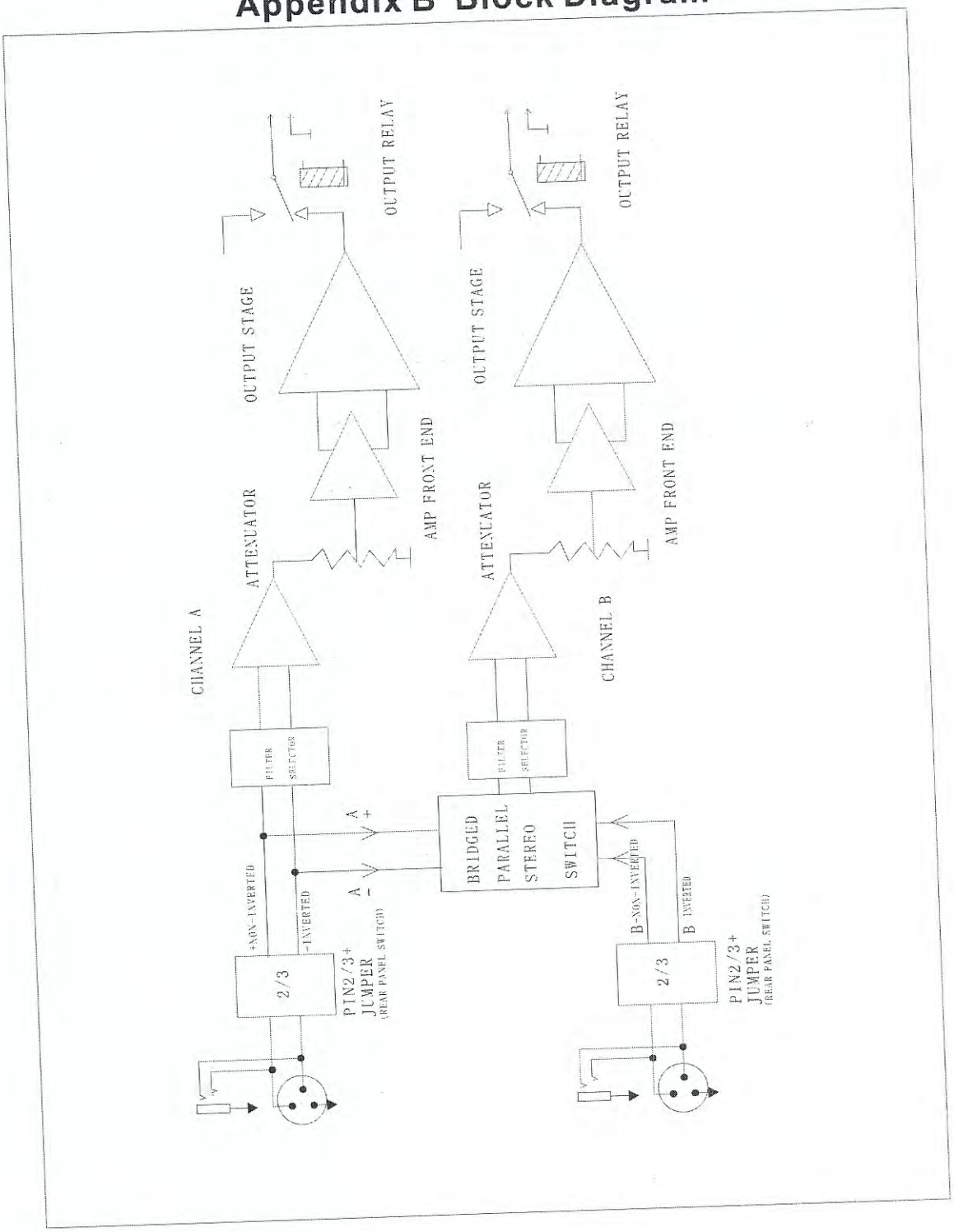

Front View

Rear&Side View

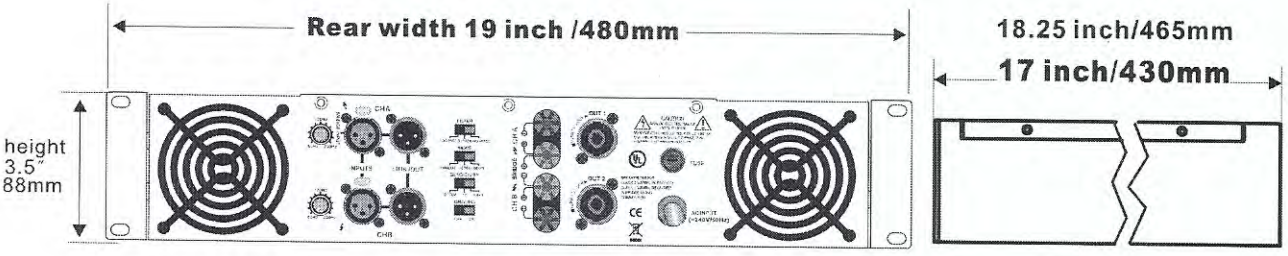

DFP900.DFP150.DFP2400

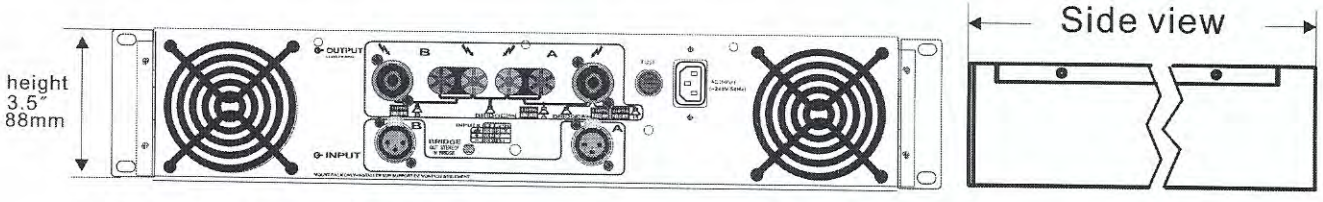

DFP260. DFP600

Rear Panel